Royal Aqua-Master

"King of Professional Regulators"

Introduced in 1964 as the Royal Master, this two stage double hose regulator became the climax of the US Divers regulators. Based upon the Aqua-Master concept, this regulator utilized a balanced first stage, boasting as being "the regulator for those who demand the very best". The Royal Aqua-Master was to become the last of the US Divers double hose models with production ceasing in 1973. It has remained the apex of double hose regulators and is regarded by vintage divers today as the model of choice. What makes the Royal Aqua-Master so desirable is its balanced first stage. This change from the Aqua-Master produced its success.

The first stage of the **DA Aqua-Master** has a diaphragm upstream valve which opens against the high pressure air. As cylinder pressure drops the first stage pressure increases, delivering greater pressure to the second stage because there is less force to close the first stage valve. Breathing becomes easier as cylinder pressure lowers. Therefore in the unbalanced first stage, the intermediate pressure output changes in inverse proportion to the diminishing cylinder pressure. This is because the surfaces exposed to incoming cylinder air are not symmetrical. Since such changes in first stage pressure impair the diver's breathing efficiency, a better first stage was developed which was unaffected by decreasing cylinder pressure (Strykowski, 1974). The big difference in the Aqua Master is that there is no balancing low pressure chamber behind (on top of) the seat. The spring block in an Aqua Master just has a hole through it and no sealing O-ring.

A portion of the seat is exposed to LP air (inside the boundary of the volcano orifice), but the back side of it is being pushed by a changing tank pressure. The forces on the top and the bottom of the seat are not balanced and will change as tank pressure changes. The intermediate pressure which controls the motion of the 1st stage diaphragm will change to compensate for tank pressure changes.

Since the valve motion is up stream (into the high pressure), a lower intermediate pressure will close the valve when the tank pressure is high (at the beginning of the dive). As the tank pressure goes down, a higher intermediate pressure will be needed to push the diaphragm and close the valve since the tank pressure is not pushing down on the seat as hard. To reduce the amount IP change, regulator manufacturers, including US Divers, used a smaller volcano orifice. Since the amount of unbalance is a function of the difference in pressure times the area, by reducing the area it reduces the unbalancing forces. The problem is that it also reduces the area of air flow. Therefore, there was a tradeoff.

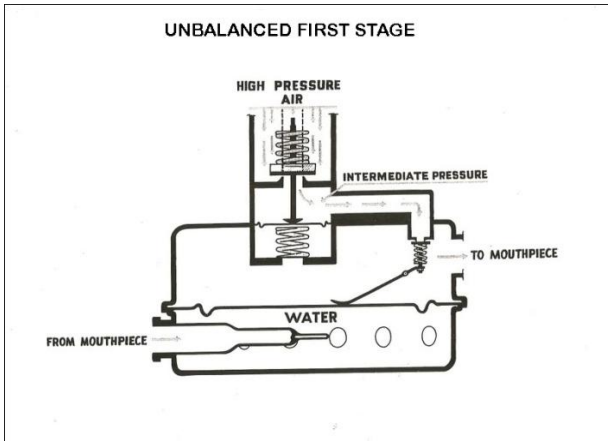

In 1961 US Divers produced the first commercially available regulator with a balanced first stage. This design was available in its single hose unit, model 1030 Calypso. The main difference between a balanced and unbalanced first stage is that a balanced first stage is not affected by diminishing cylinder pressure throughout the dive; the intermediate pressure output remains relatively the same from full cylinder to empty. This is accomplished by allowing all surfaces exposed to cylinder pressure to be balanced; that is, for the pressure that attempts to close the valve, there is an equal and opposing pressure that attempts to open the valve. The two pressure thrust/ forces balance each other.

In the balanced valve, the cylinder air is routed around the valve ends and has no effect in seating or opening the valve. Only the mechanical action of the diaphragm and springs controls the action of the valve and constant first stage pressure is maintained regardless of cylinder pressure. Larger orifices can be used resulting in larger volumes of air (with less dynamic pressure drop) and easier breathing.

In 1964, US Divers incorporated a balanced first stage into their double hose regulators. This began the Royal series.

Photo courtesy of www.vintagedoublehose.com

Below is a diagram of the **Royal Aqua Master** (the pictures of the parts may also help).

The green represents the HP seat.
The gold is the spring block / balancing chamber.
The red is the high pressure air.
The light blue is the low pressure air.

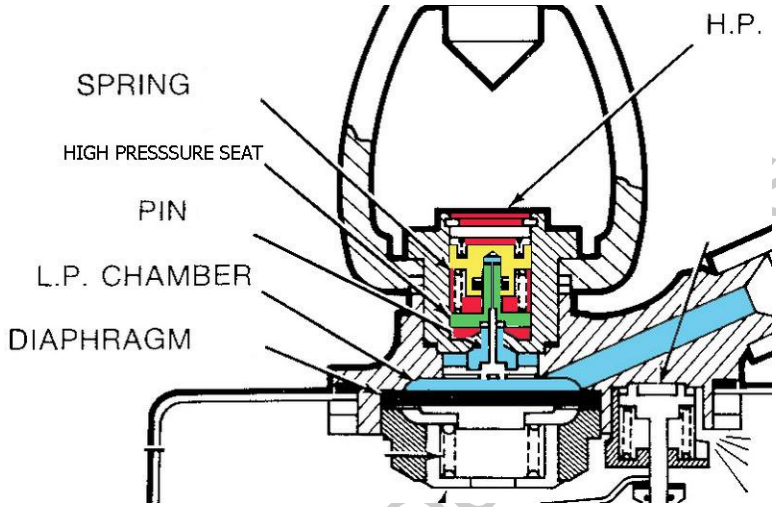

Notice that inside the seat (in green) there is a thin line of light blue low pressure air. That small hole down the seat supplies the low pressure air to the chamber inside the spring block (notice the blue chamber). There is a small O-ring (shown in black) in the spring block that doesn't allow the high pressure air to leak into the LP chamber.

Photo courtesy of www.vintagedoublehose.com

The seat closes on the bottom against the edge of a volcano shaped orifice. Notice that the diameter (and therefore the area) of the orifice on the bottom is the same as the diameter of the chamber on the top of the seat assembly. This allows the seat to move up and down with the same area of low pressure air on top and below. The pressure times the area produces a force and since they are equal they balanced each other. The high pressure of the tank does not affect the opening or closing of the valve seat. The HP air only presses around it not up or down on it. The seat motion is only controlled by the push pin which connects the diaphragm to the seat and the

springs (the pin is not shown, but it would be in the white area and then down to the diaphragm). The diaphragm motion is only affected by the low pressure air, ambient pressure, and spring forces. The IP is therefore kept constant and independent of tank pressure. Since the balanced first stage is not affected by tank pressure, it also allows the use of a larger volcano orifice for higher potential flow rate. (Heros, L., 2007).

<u>The Royal Master 1964-1965</u>

The direct predecessor of the Royal Aqua Master was first introduced in 1964 to 1965 as the Royal Master.

Photos courtesy of thescubamuseum.com

The Royal Master had a balancing chamber with only one O-ring (no back up ring) and a small spring pushing a washer to hold the O-ring in place.

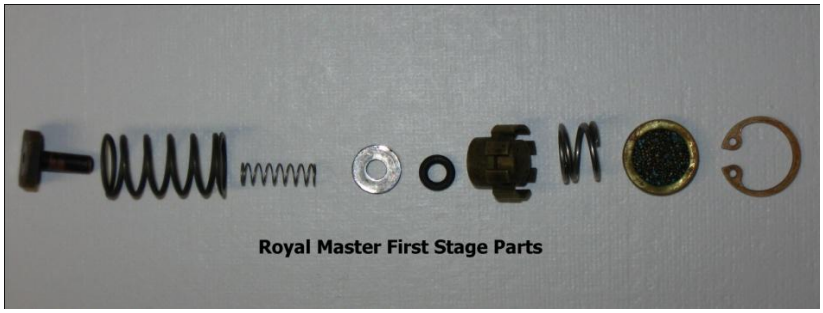

Produced in shiny chromed brass housing with seven clips, the Royal Master utilized the same hose, mouthpiece and clamps as the other double hose models of 1964. The hoses and curved mouthpiece was black with the early US Divers logo on the mouthpiece. The hose clamps with

the improved screw and nut fastening were used. The yoke screw was the raised letter type, with both short and long yokes seen on models in various collections.

Photo courtesy of www.thescubamuseum.com

The Royal Master has been found with a serial # spread from1080 to 3083 and shows no changes in that period. They all had the "US Divers" stamped yoke screw.

The Royal Aqua-Master 1966-1969

In 1966 the Royal Aqua Master was introduced. The only mechanical difference from the Royal Master being in the balancing chamber; the small spring was dropped and a lip was added to the balancing chamber to hold the O-ring. A back-up ring was added a year or two later to avoid O-ring extrusion due to high tank pressure.

The back-up ring in the Royal Aqua Master was added years before the common use of 3000 psi (and higher) tank pressures, but it has allowed the design to be used at most any modern tank pressure without concern of O-ring extrusion.

Photos courtesy of www.thescubamuseum.com

The Royal Aqua-Master continued the use of the hose/mouthpiece/clamps that was on the Royal Master. The yoke screw however changed to the use of what is today called a tire screw with the early US Divers logo. The yoke was also of the long type. The Royal continued to use the seven clips to close the shiny chrome case. A housing band with a screw was available and many double hose regulators were converted to this feature which made servicing more convenient.

For the Royal Aqua-Master (square label), the serial number spread is 4006 to 16818. The "USD" yoke screw used from 4006 to 5264. The "tire" yoke screw with short yoke from 5470 to 9689, with #6652 having a factory tag of 1/24/66. The "tire" yoke screw with "old" Aqualung logo and long yoke have been found with serial numbers from 9825 to 15879. The "new" logo has been seen on regulators from serial numbers 16407 to 16818.

Early Logo on Yoke Screw

Later Style Logo on Yoke Screw

Royal Aqua-Master 1970-1973

The 1970s began the end of the US Divers double hose regulators. In the first few years of this decade, the Mistral and the Aqua-Master, available since the late 1950s would not be produced. The Royal Aqua-Master survived through the 1973 catalog year and was sold for a few years until the remaining stock was gone. With the 1970 model, the Royal Aqua-Master had a few cosmetic changes. The rectangular label with the serial number was replaced by a large, chrome sticker. The serial number was stamped on the yoke-side case. The tire yoke screw changed logo and the seven box clips were finally replaced by a chrome-plated brass ring with tightening screw. Hoses, mouthpiece and clamps were essentially the same as preceding models; however the mouthpiece did have the newer US Divers logo.

A final change for the Royal Aqua-Master occurred in its final year. This change was the use of a large 3000 psi yoke and screw.

Photo courtesy of www.thescubamuseum.com

The Royal Aqua-Master (round label) has been found with serial numbers ranging from 91266 to 747716. The "tire" yoke screws are seen on numbers 91266 to 402436. This version of the regulator was produced for 2 years, but the serial number spread is over 300,000. There seems to be huge gaps in different areas of numbers here. You'll have 10-20 regulators grouped in one area (of numbers) then a big jump of numbers with another 10-20 regulators grouped in another area, with nothing in between.

For the 3000 psi yoke models the serial number spread is 646646 to 747716, but between 656003 & 704942, none have been seen. A noted collector has found 7 regulators from 646646 to 656003, then nothing, and then 5 regulators from 704942 to 747716. He feels that maybe it's the Navy scenario in that missing section?

The balanced first stage of the Royal Aqua-Master did have a few minor changes in the internal parts as can be seen in these photos:

Photo courtesy of Luis Heros

Basically the change was in variation of capturing the "O" ring. Function remained the same with all models.

The design of the Royal Aqua-Master first stage has been so successful that has continued to be the primary first stage design for most US Divers/ Aqua Lung regulators; it is used on all the Conshelf, Titan, Mikron, etc. Not only has the mechanical design not changed, but the internal moving parts are actually the same.

Although the Royal Aqua-Master is not one of the rarest double hose regulators today, it still commands a fair price on today's market for collectors and the numerous divers who continue to use this model. Many service techs think the Royal Aqua-Master is the easiest double hose to service. It is far easier than a DA Aqua-Master since the first stage IP (Internal Pressure) locks at once and it is extremely easy to adjust. There is no time wasted with a drifting IP and soft IP lock, etc. that occurs with a DA Aqua-Master. You can also adjust it using any tank pressure. It has been said to be the "regulator of those who demand the very best in double hose regulators". And many vintage divers still refer the Royal Aqua-Master as "King of Professional Regulators".

References cited

Heros, Luis, 2007, www.vintagedoublehose.com forum

Heros, Luis, 2010, Personal communication

Strykowski, Joe, 1974, Diving For Fun, Dacor Corporation, Northfield, IL, p. 62.

Ovanessian, Mike, 2010, Personal communication for serial number data

www.thescubamuseum.com Photos, 2010

www.vintagedoublehose.com Photos, 2007, 2010